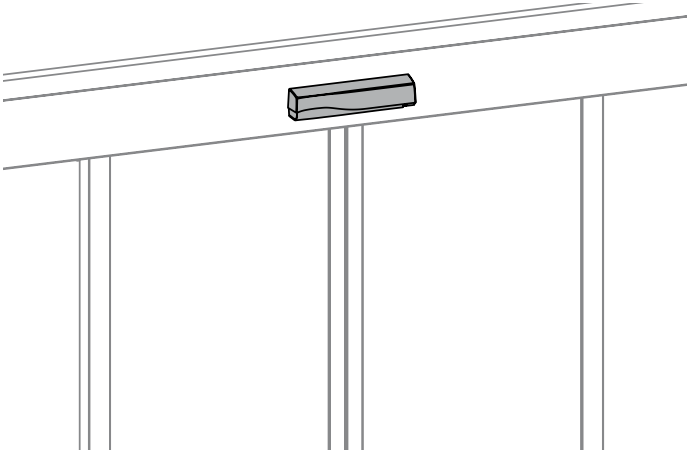

GC 363 R / SF

151263-01

42.8438 v1 - 01-2015

Original operating instructions for device version 0400

Contents

Symbols and illustrations

Warning notices
Warning notices are used in these instructions to warn you of property damage and personal injury.

- Always read and observe these warning notices.
- Observe all the measures that are marked with the warning symbol and warning word .

Abbreviations

FR	Escape and rescue routes
IR	Infrared
AIR	Active infrared control
RAD	Radar
LCD	Liquid Crystal Display
HSK	Main closing edge
NSK	Secondary closing edge

Product liability

In accordance with the liability of the manufacturer for his products as defined in the German "Product Liability Act", the information contained in this brochure (product information and proper use, misuse, product performance, product maintenance, obligations to provide information and instructions) is to be observed. Failure to comply releases the manufacturer from his statutory liability.

1 Safety

1.1 Intended use

The combined sensor GC 363 may only be used to actuate and safeguard automatic sliding doors and circular sliding doors with GEZE drives. The minimum object size corresponds to the reference object CA according to DIN 18650 or 16005 both upright and lying down. The sensor can be used to secure automatic sliding doors against impact and trapping of the human body.

GC 363 R	(in the direction of emergency exit)	✓	✓
GC 363 SF	✓	✓	✓

1.2 Safety notices

- The mandatory installation, maintenance and repair work must be performed by properly trained personnel authorised by GEZE. Any attempts at repairs by unauthorised personnel cancel the factory guarantee.
- The device may only be operated with safety extra-low voltage (SELV) with electrically protective separation.
- The country-specific laws and regulations are to be observed during safety-related tests.
- Make sure that the door control cover is fitted correctly and earthed.
- If unauthorised changes are made to the system, GEZE cannot be held liable in any way whatsoever for any resulting damage, and the approval for use in escape and rescue routes ceases.
- GEZE makes no guarantee for combinations with third-party products.
- Only original GEZE parts may be used for repair and maintenance work.
- Observe the latest versions of directives, standards and country-specific regulations, in particular:
  - ASR A1.7 "Doors and gates"
  - DIN 18650 "Building hardware – Automatic door systems"
  - DIN EN 16005 "Power operated pedestrian doorsets – Safety in use – Requirements and test methods"
  - Accident-prevention regulations, especially BGV A1 "General regulations" and BGV A2 "Electrical systems and equipment".
- The risk assessment and installation of the sensor and the door system in compliance with national and international regulations and door safety standards are the responsibility of the door manufacturer.
- Any uses of the device other than those described in this manual do not correspond to the approved purpose and cannot be guaranteed by the manufacturer.

1.3 Safety conscious working

- Secure workplace against unauthorised entry.
- Watch swivelling range of long system parts.
- Secure the cover/drive panels against falling.
- Attach safety stickers to glass door leaves.
- Danger of injury with opened drive. Hair, clothing, cables, etc. can be drawn in by rotating parts.
- Danger of injury caused by unsecured crushing, impact, drawing-in or shearing spots.
- Danger of injury due to broken glass.
- Danger of injury due to sharp edges in the drive.
- Danger of injury during installation through freely moving parts.

1.4 Environmentally conscious working

- When disposing of the door system, separate the different materials and have them recycled.

2 Description

The combined detectors GC 363 R / SF have a radar field for detecting movement and an infrared field for protection.
It is not possible for several systems to influence each other and result in a hazard. Unintentional stop signals are possible where detectors are mounted next to one another as their infrared measuring ranges overlap and each sensor could activate the other. This influence is kept to a minimum by different frequency settings.
The optional interface GC 363 S is exclusively for use with the GC 363 SF combined detector. The interface permits several combined detectors to be switched in series for FR sliding doors with large opening widths.

Variant	GC 363 R	GC 363 SF
Black	151237	151239
According to RAL	151238	151240

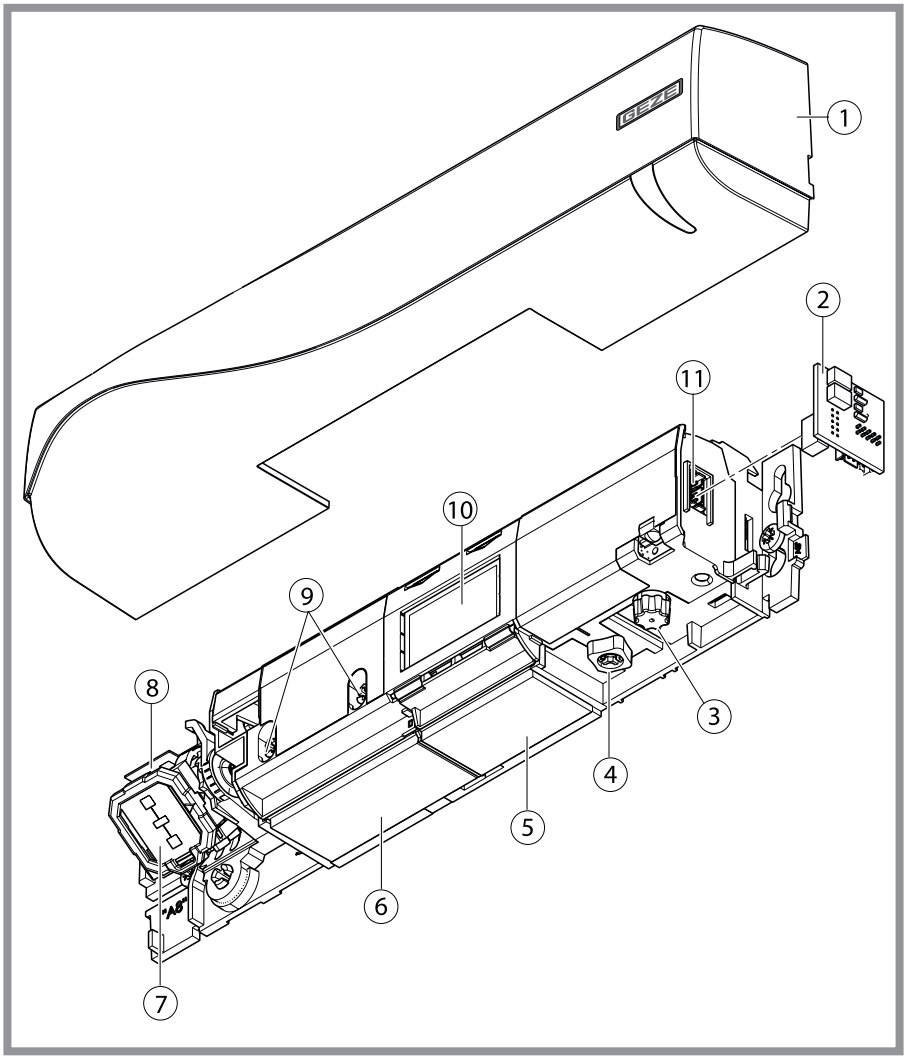

1	Cover	6	AIR lens (receiver)
2	GC 363 S interface (optional accessory for GC 363 SF)	7	Radar antenna (wide field)
3	Setting button (grey)	8	Radar antenna (narrow field)
4	Button for setting the angle of the AIR curtain (red)	9	Width adjustment of the AIR curtain
5	AIR lens (transmitter)	10	LCD
		11	Main connector

2.1 Supplied by GEZE

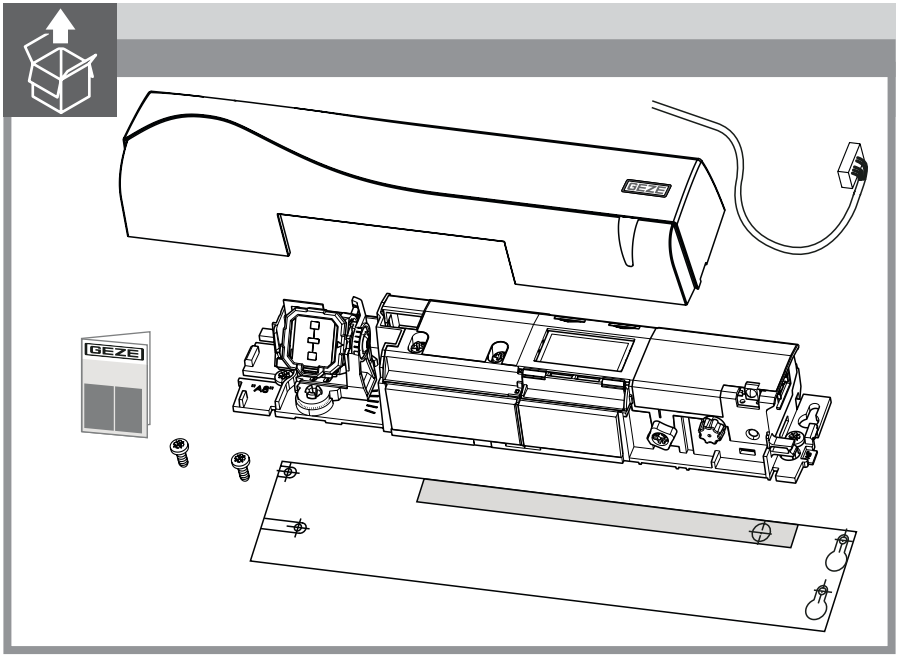

3 Work to be done before installation

3.1 Installing the drive

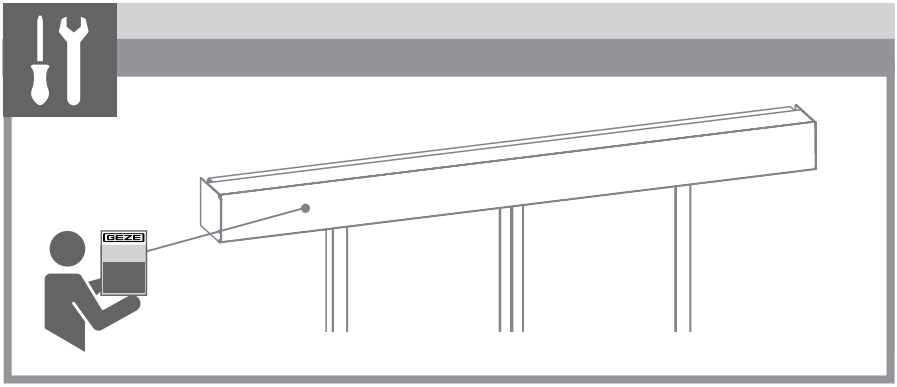

- Make sure that the drive cover is earthed.

3.2 Protection sensor

One combined detector per passage direction is installed on automatic sliding doors. The protection sensor GC 339 may be required in addition for larger opening widths.

▶ See installation instructions GC 339.

For escape and rescue routes:

- use protective door leaf if necessary. Heed standards.

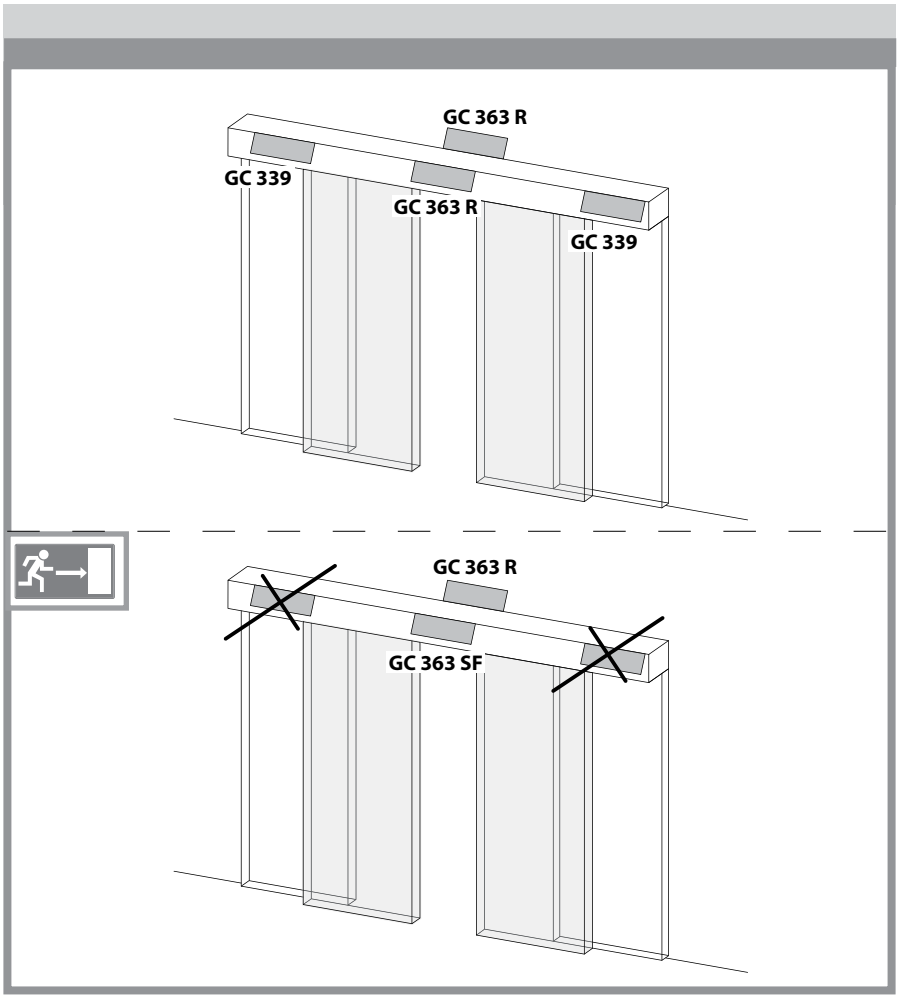

4 Installation

4.1 Installation without accessories

- Avoid extreme vibrations.
- Do not cover the sensor.
- Keep away from fluorescent lamps.
- Keep away from moving objects.
- Avoid highly reflective objects in the infrared range.

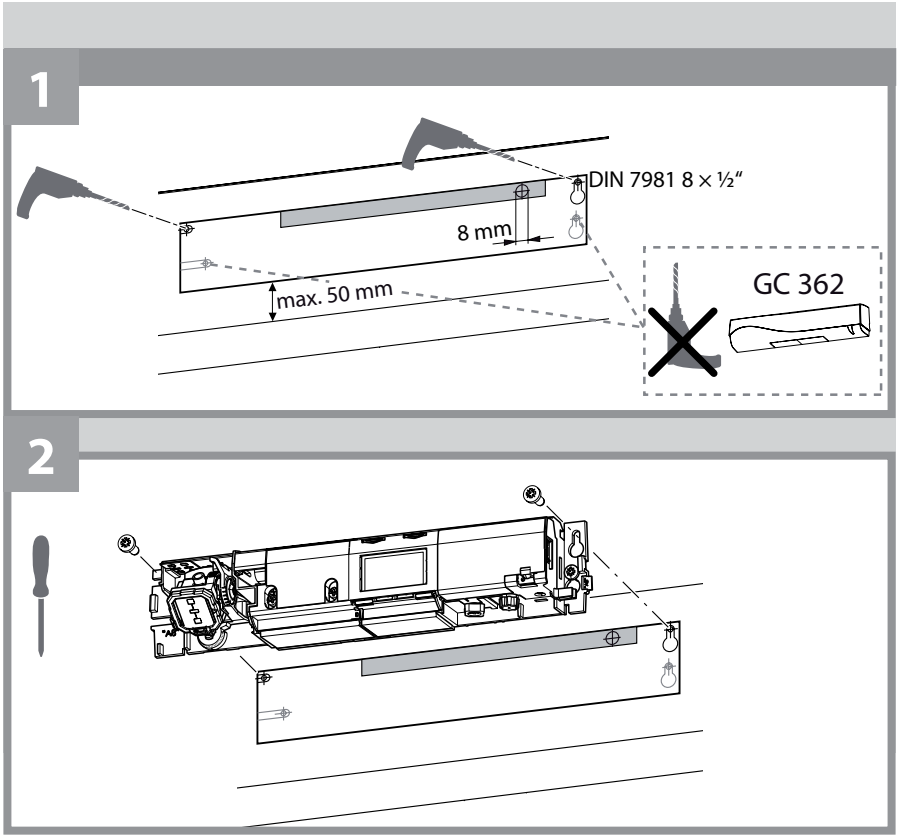

4.2 Installation with ceiling installation set

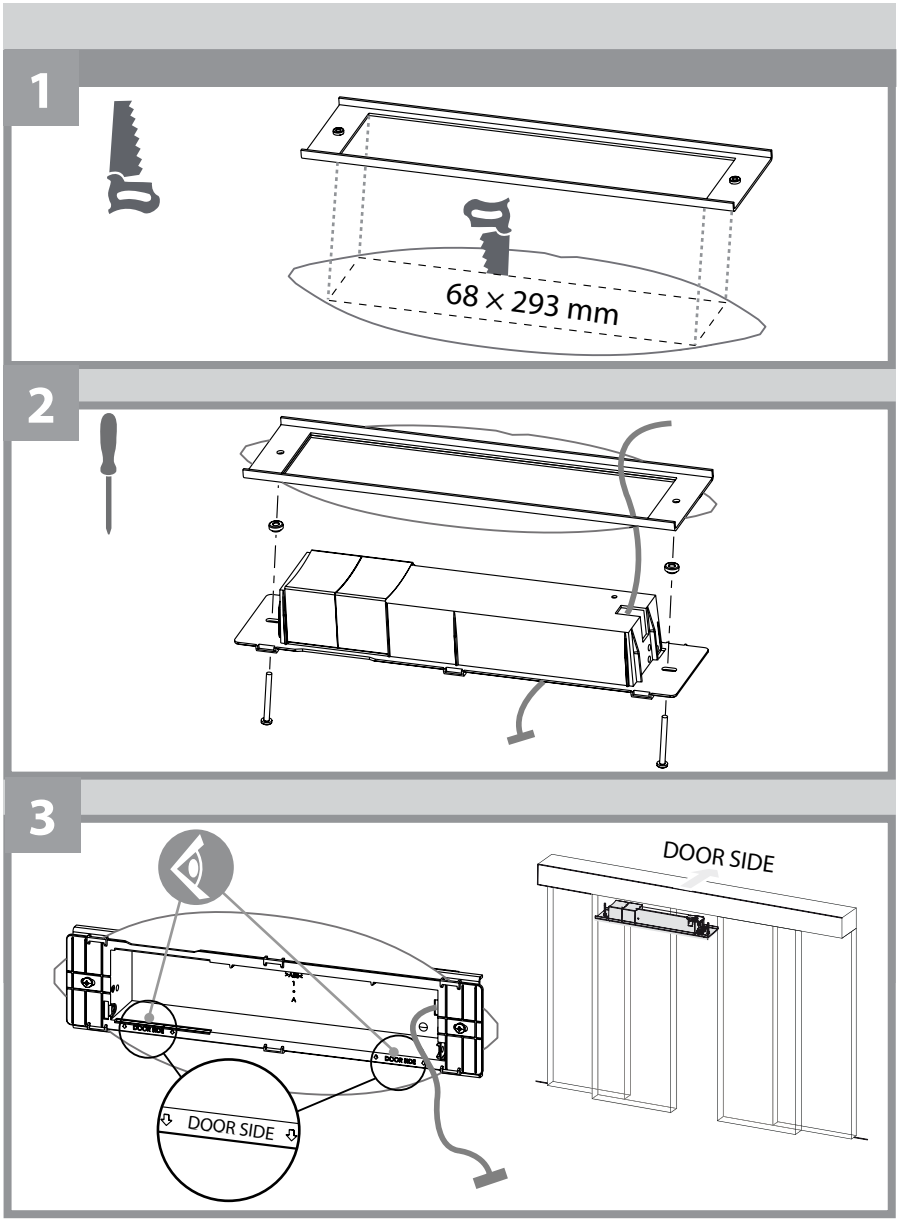

4

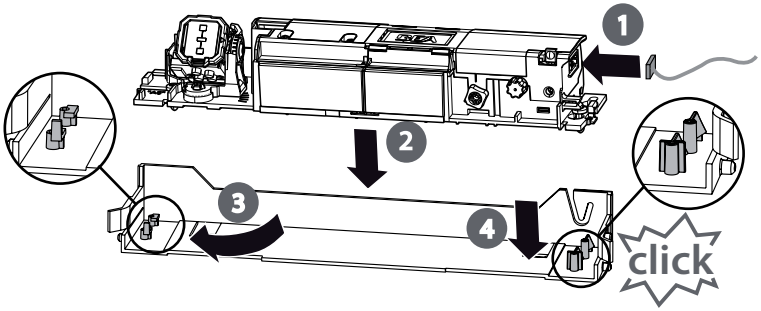
1
2
3
4
click

5

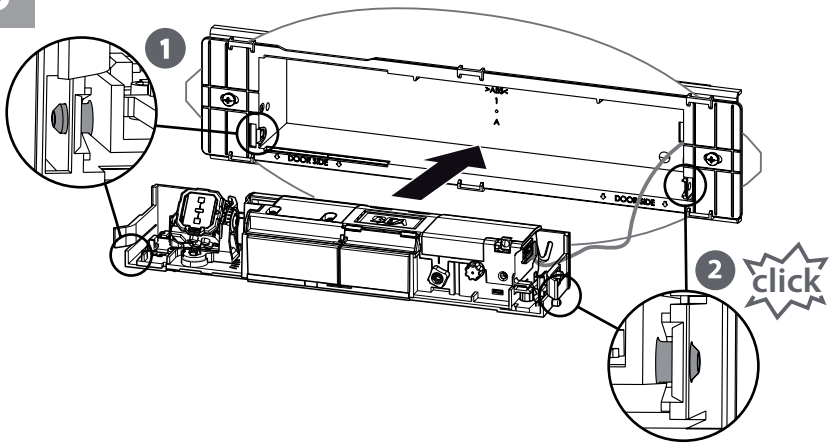
1
DOOR SIDE
DOOR SIDE
2
click

6

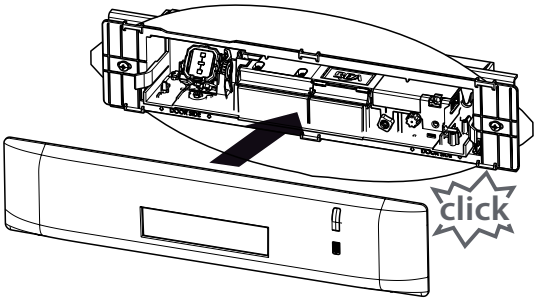
DOOR SIDE
DOOR SIDE
click

4.3 Installation with mounting bracket

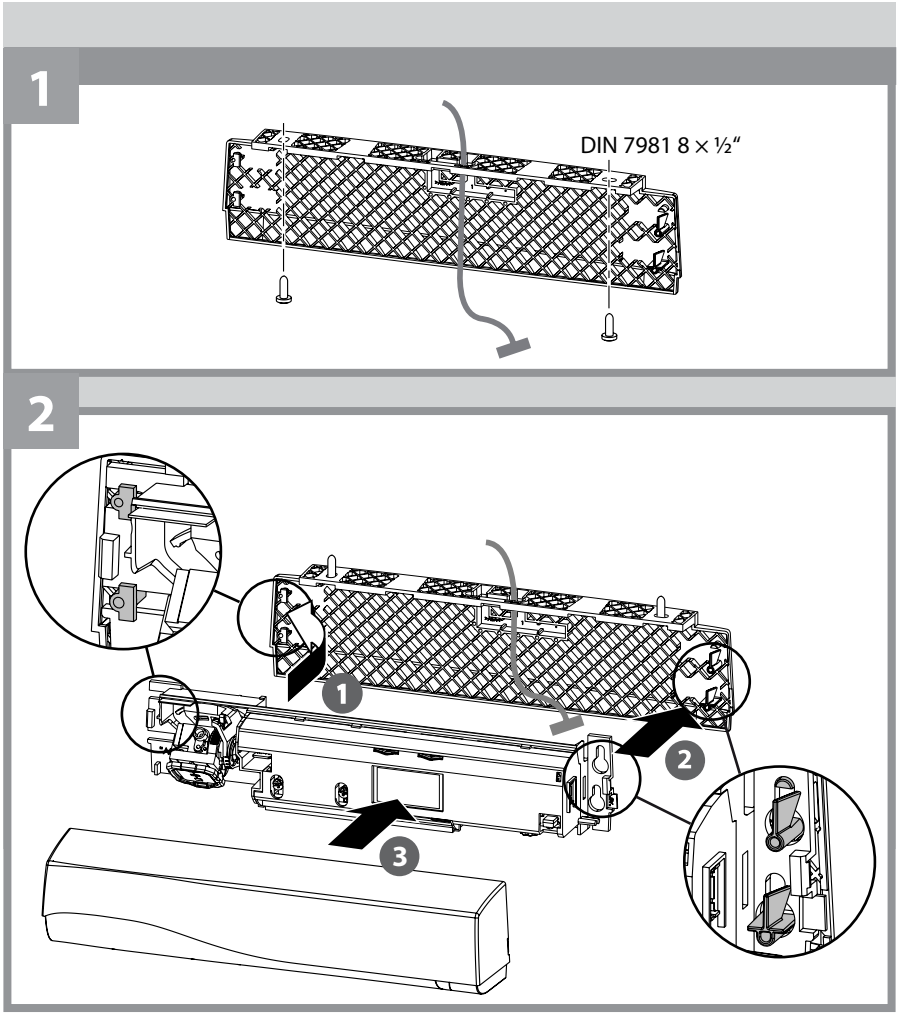

4.4 Installation with weather canopy

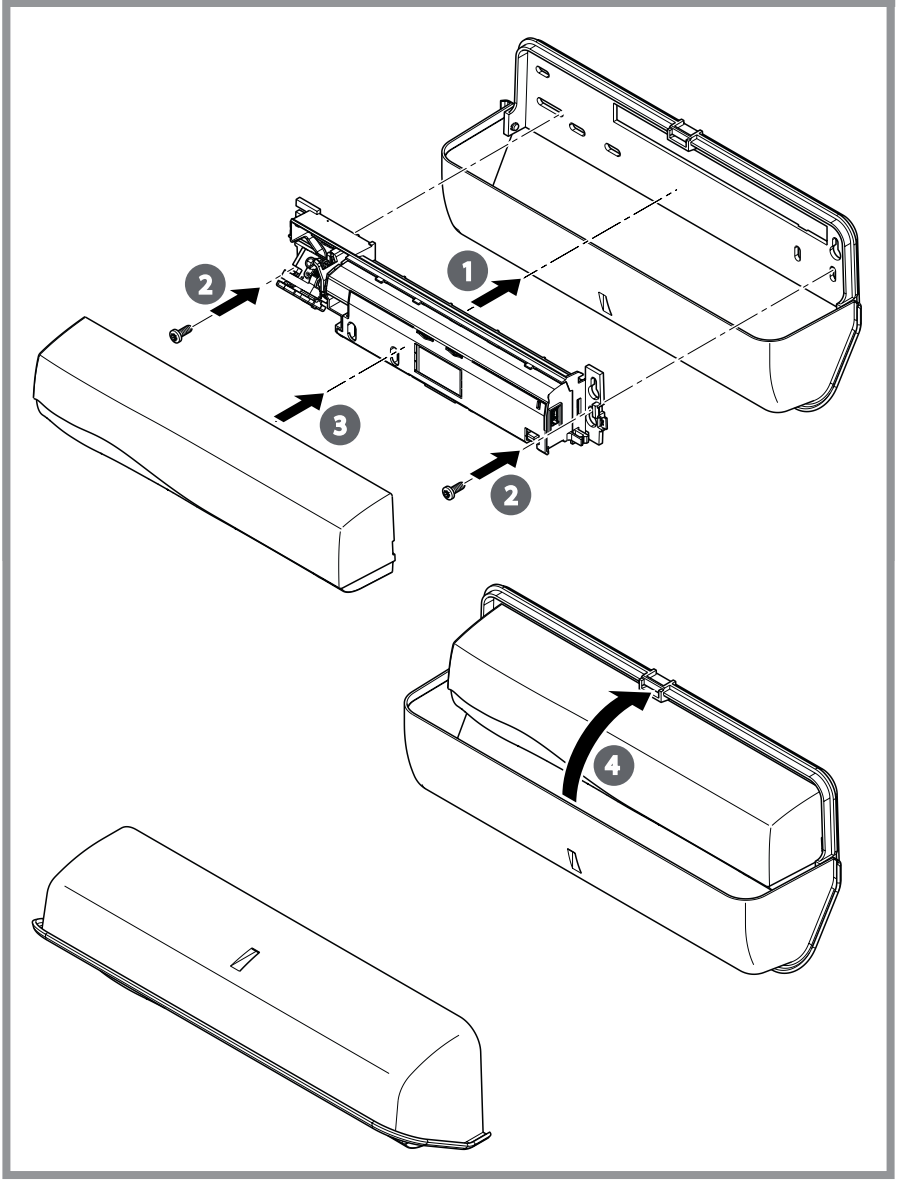

4.5 Cabling

- Heed wiring diagrams for the sliding door drives.

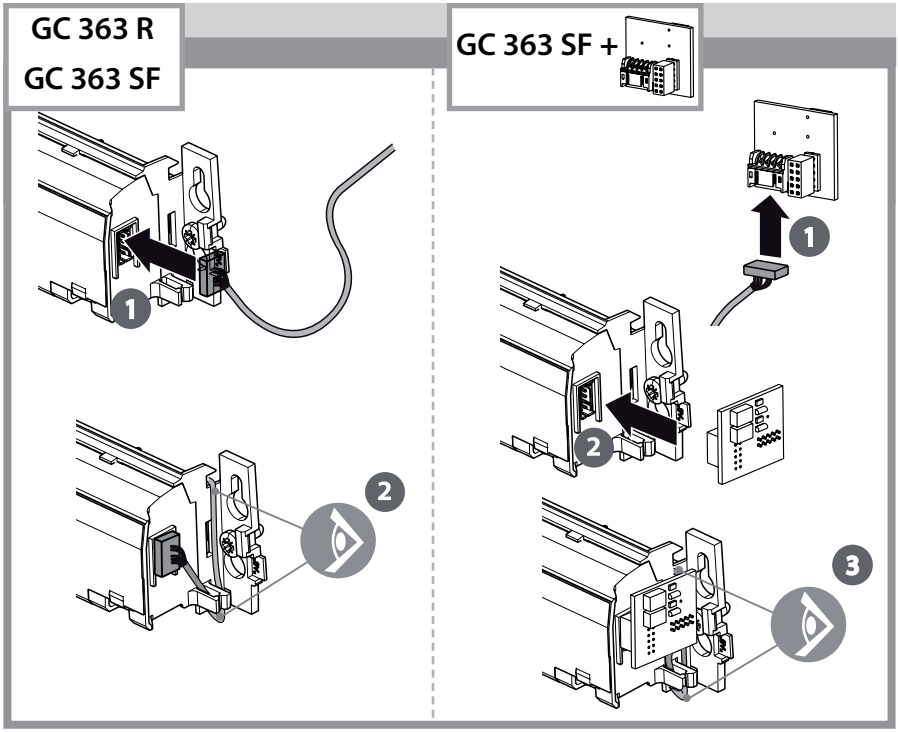

The optional interface GC 363 S is exclusively for use with the GC 363 SF combined detector. The interface permits several combined detectors to be switched in series for FR sliding doors with large opening widths.

5 Commissioning

5.1 Radar detector

- Set the detection field and sensitivity of the radar movement detector as per AutSchR:
  - Scanned field = opening width x 1.5 m
  - Movement speed from 10 cm/s must be detected
  - The whole door width must be covered for escape and rescue route doors

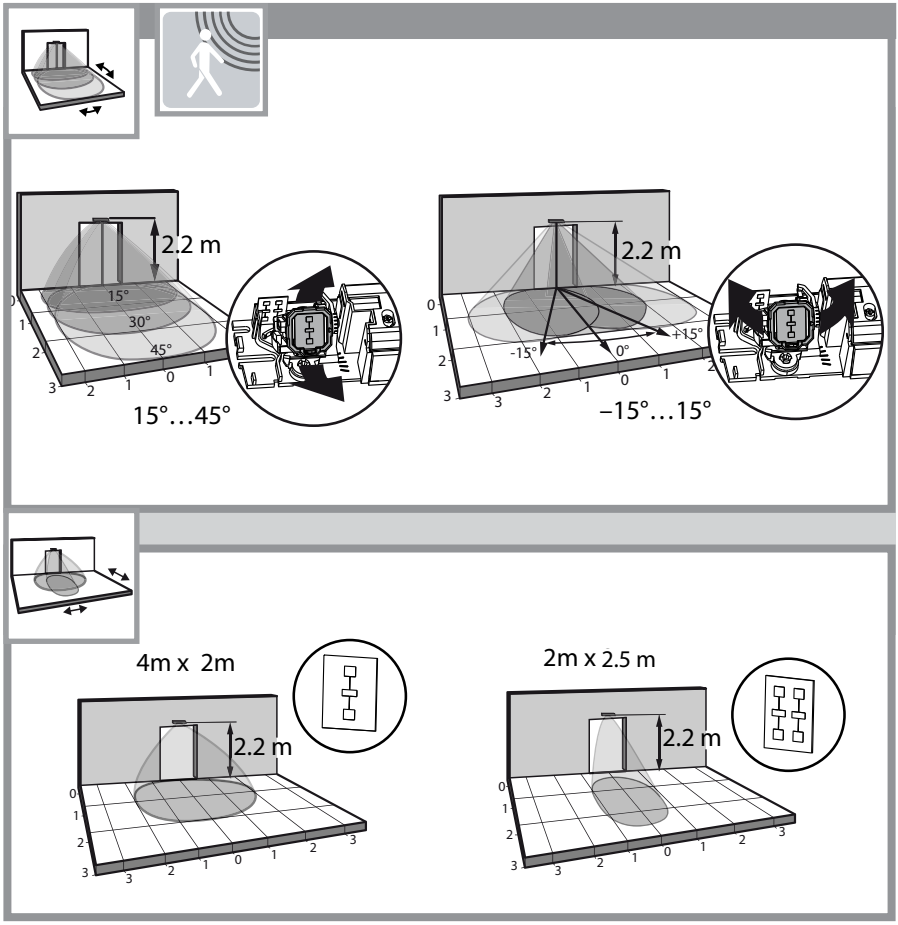

Replacing radar antennas (narrow and wide)

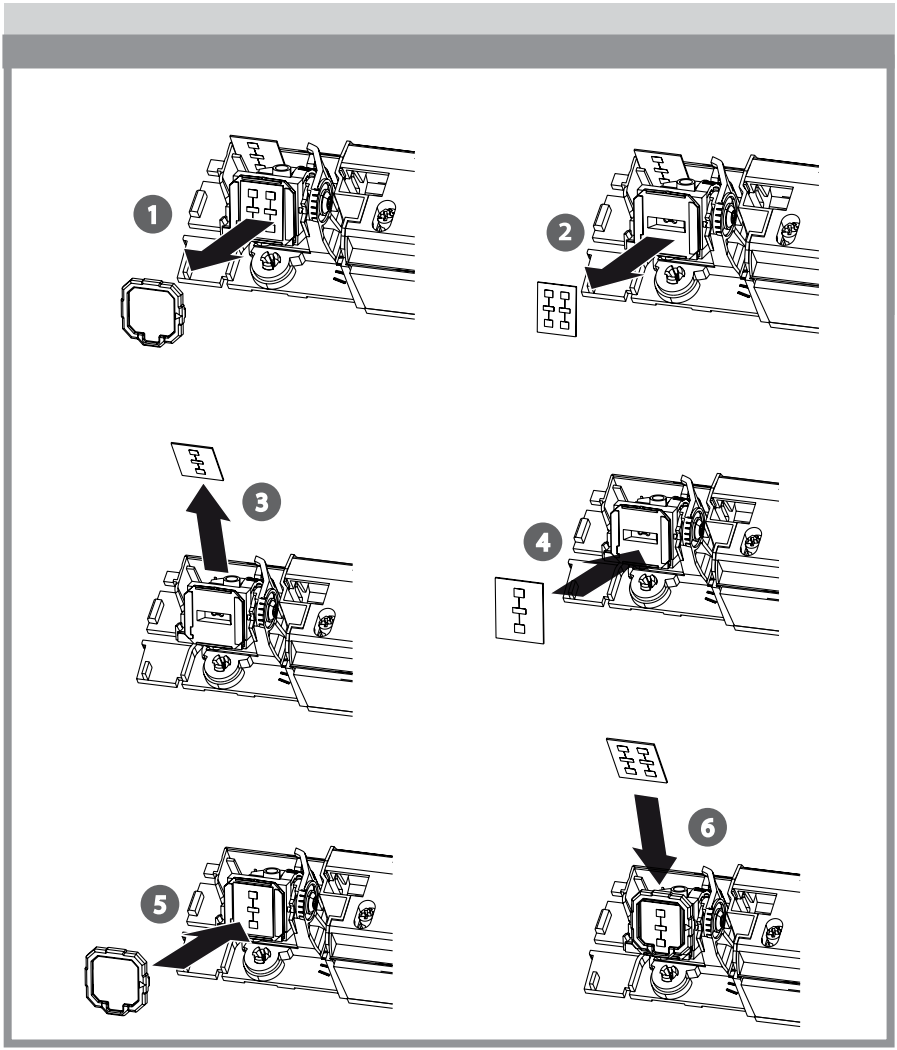

5.2 Protection area

The position of the IR curtain in relation to the door can be checked using an infrared detector.

▶ Activate 4 visible spots.*	▶ Adapt the angle of the AIR curtain.	Yellow LED is flashing on infrared detector : Alignment correct.

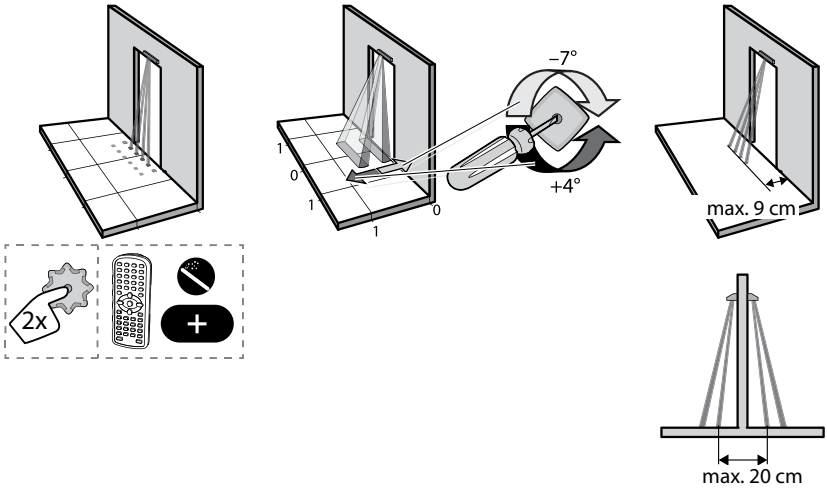

* Visibility depends on the environmental conditions.

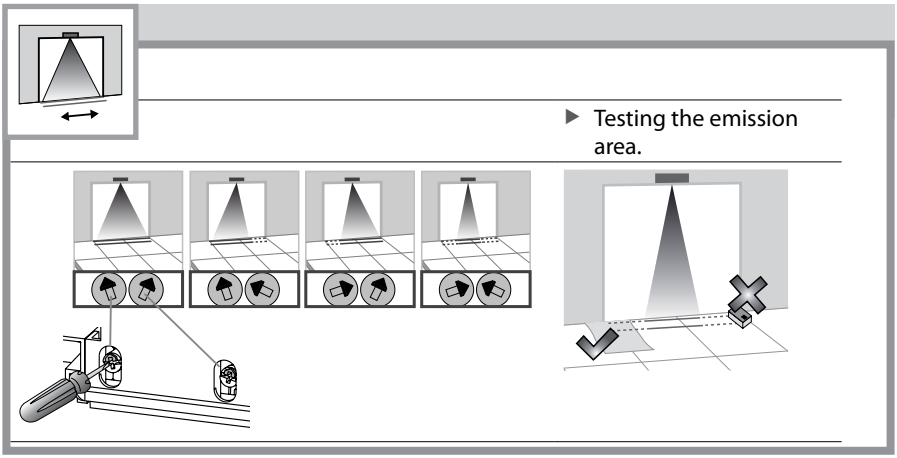

- The whole width of the door must be covered.
- Test the width of the required area using a piece of paper (DIN A4), since the infrared detector scans the whole emission area.

Standard-conform sensor setting according to DIN 18650 / EN 16005

Installation height	Scanned width DIN 18650 / EN 16005
2.00 m	2.00 m
2.20 m	2.20 m
2.50 m	2.50 m
3.00 m	2.50 m / 3.00 m
3.50 m	2.50 m / 3.00 m

5.3 Settings

▶ Configure the sensor using LCD or remote control (see chapters 6 and 7).

5.4 Teaching

- Before starting teaching, move out of the infrared field.
- Before leaving the installation, test the correct sensor installation.

Teaching		2 sec.	
Teaching with door movement	+	4 sec.	0

6 Configuration possibilities

6.1 Using the LCD menu

6.1.1 Display during normal function

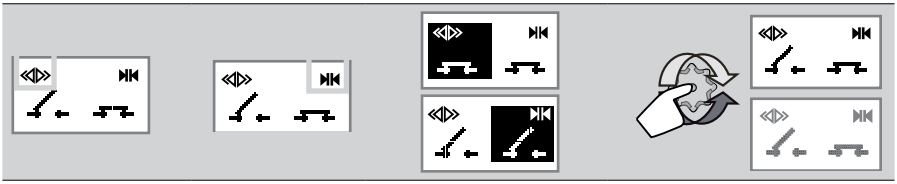

Opening impulse	Protection	Image shown negative = active exit	Set contrast

6.1.2 Menu navigation

- Enter password, if set

6.1.3 Changing ZIP code

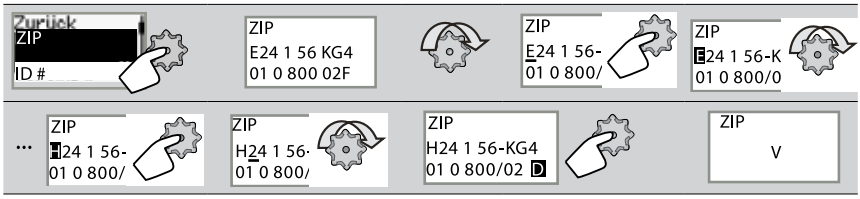

6.1.4 Changing and storing values

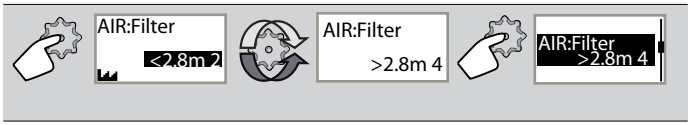

6.1.5 Checking values using the remote control

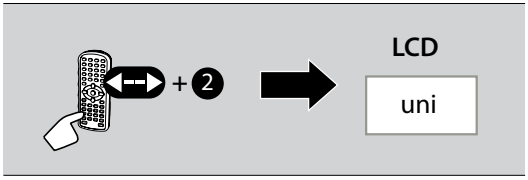

7 Settings

7.1 Default settings

▶ Choose the following default settings or configure the settings yourself (chapter 6 on page 20).		
STANDARD: Standard inside and outside installations	Voreinst. Standard	1
DIFFICULT ENVIRONMENTS: Difficult installations due to environment or weather	Voreinst. Kritische Bed.	2
SHOPPING STREET: Installations in narrow pedestrian areas	Voreinst. Einkaufsstr.	3

- GC 363 SF only: Do not use automatic direction detection mode (parameter RAD:Direction 5 to 7) if the sensor is used in an emergency exit.

BASIC menu	0	1	2	3	4	5	6	7	8	9
Back / Continue										
Comfort default settings		Standard [1]	Difficult cond. [2]	Shopping street[3]	[1] Factory settings [2] Increased immunity filter + 1 curtain [3] Increased immunity filter + diversion = movement and presence Not permitted for FR doors!					
RAD: Size	small	>	>	>	>	>	>		>	large
RAD: Output		**Closer** *Opener*	**Opener** *Closer*	**Opener** *Opener*	**Closer** *Closer*	**Current** *Opener*	**Frequency** *) *Opener*			
AIR: Filter		< 2.8 m					> 2.8 m		To ensure compliance with EN 16005 and DIN 18650, the values 6 and 7 must be selected for an installation height of 2.8 m or more	
		low	normal	high	higher	highest	normal	high		
					not compliant with DIN 18650 / EN 16005		Inside	Outside		
AIR: Frequency		A	B				Use different frequencies for sensors which have been installed next to or above one another.			
Back / Continue										

*) Standard setting GC 363 SF

ADVANCED menu	0	1	2	3	4	5	6	7	8	9
Back / Continue										
RAD: Filter		low		>	>	>	>	>	>	high
RAD: Direction	Radar off **	bi *	uni	uni EM	uni AWAY	bi ** auto	uni ** auto	EM ** auto	EM: for persons with restricted mobility AWAY: direction detection away from the sensor auto: adaptation to field size in small shops (not suitable for FR doors)	
	* The bi-setting is more sensitive to the influences of the weather. ** The setting is not permitted if the sensor is used in emergency exits.									
RAD: Holding time	0.5 sec.	1 sec.	2 sec.	3 sec.	4 sec.	5 sec.	6 sec.	7 sec.	8 sec.	9 sec.

AIR: Width										
	In addition, always use a screwdriver to set the arrows for field width on the detector.									
AIR: Quantity	Service mode	1	2	Service mode = no scanning of presence for 15 minutes (during maintenance). This value does not permit conformity of the door system with EN 16005 and DIN 18650.						
AIR: Max. time	Movem.	15 sec.	30 sec.	1 min.	2 min.	5 min.	10 min.	20 min.	60 min.	endless
	Minimum value for DIN 18650: 1 min. Minimum value for EN 16005: 30 sec.									
AIR: Output		*Closer* **Opener**	*Opener* **Closer**	*Opener* **Opener**	*Closer* **Closer**	*Current* **Opener**	*Frequency* **Opener** ***)			
Diversion	Movem. (1)	Movem. (1) or pres. (2)	Movem. (1) and pres. (2)	Opening output is active in the case of: (0) Movement detection (1) Movement or presence detection (2) Movement and presence detection						
Factory settings	Reset to factory settings.								Full reset	Partial reset (outputs are not reset)
Back / Continue										

***) Standard setting GC 363 SF

DIAGNOSIS menu

ZIP	All parameter values in zipped format (code) In the event of any faults, inform the service employee responsible of this ZIP code.	POWER SUPPLY	Power supply at the plug
ID #	Individual ID number	OPERATING TIME	Time since voltage switched on for 1st time
Error	The last 10 errors and day display	DELETE ERROR	Deletes all stored errors
AIR: Spot view	Displays the spots which trigger scanning	PASSWORD	Password for LED and remote control (0000 = no password)
AIR: V1 ENERG	Signal amplitude at curtain 1	LANGUAGE	Language of the LCD menu
AIR: V2 ENERG	Signal amplitude at curtain 2	ADMIN	Enter code for administration mode

8 Last installation steps

- Before leaving the installation, check the sensor for correct function.

1

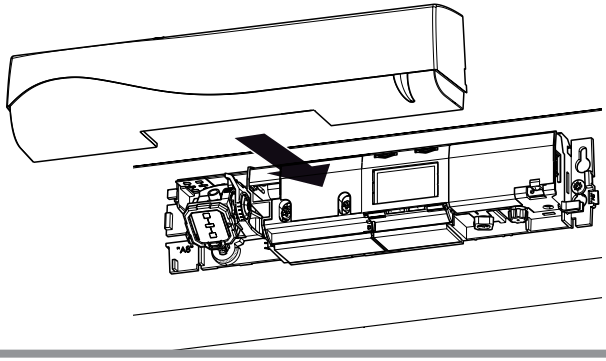

9 Further installation situations

9.1 Single leaf installation

Installation height	Distance between detector and HSK	Max. leaf width*	Scanned width DIN 18650/EN 16005
2000	0	1150	2000
2200	100	1350	2200
2500	250	1650	2500
3000	500	1900	2500 / 3000
3500	750	2150	2500 / 3000

* When only one combined detector is used. Otherwise a GC 339 is required for further protection.

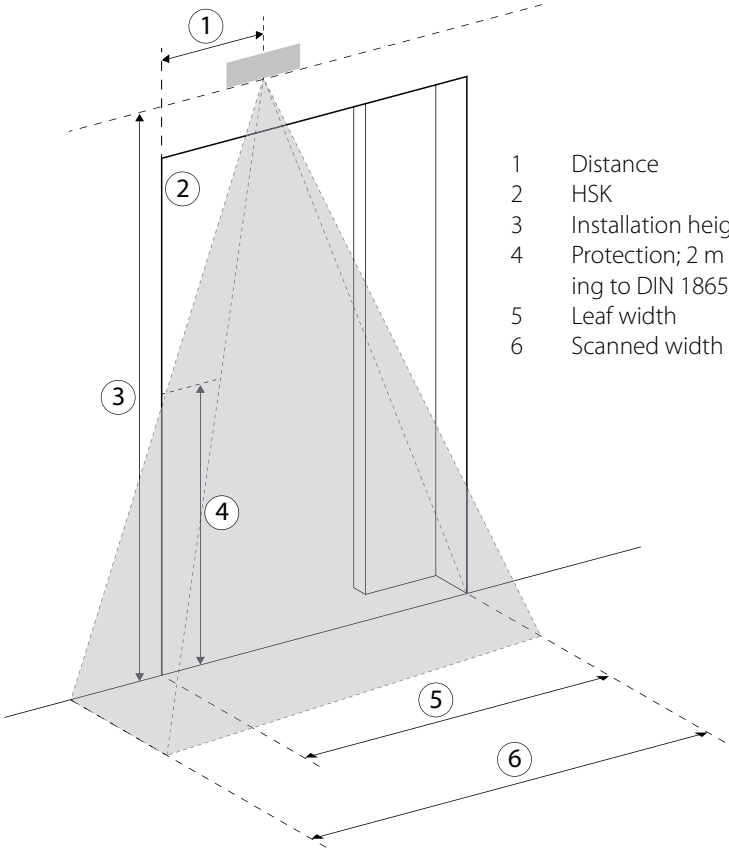

1 Distance
2 HSK
3 Installation height
4 Protection; 2 m height according to DIN 18650 / EN 16005
5 Leaf width
6 Scanned width

9.2 Lintel installation

According to DIN 18650/EN 16005, the distance between the inner light curtains must not exceed 200 mm.

Example configuration:

- Light curtain (right-hand side) set to –5°
- Combined detector near the door leaf at a distance of 50 mm to the leaf
- Protection under the soffit 150 mm

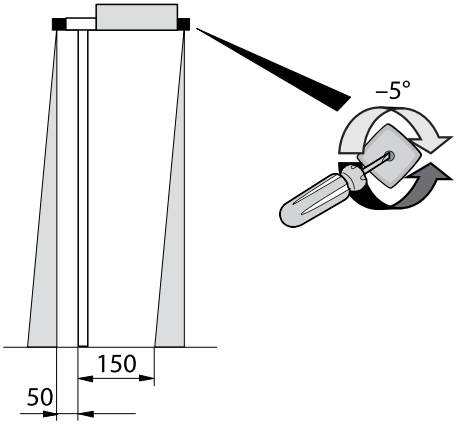

In the case of other dimensions, please contact the sales department first.

Installation height a (in mm)	Max. soffit depth b (in mm)
2000	325
2200	342
2500	369
3000	412
3500	456

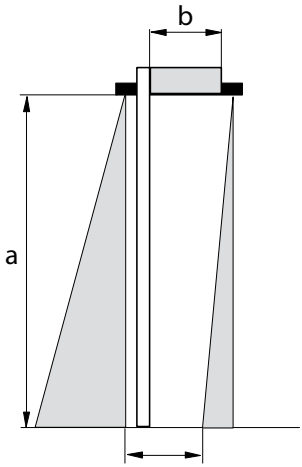

max. 200 mm
(DIN 18650/EN 16005)

10 Maintenance

- The visual parts must be cleaned at least once a year.
- Do not use aggressive cleaning agents or chemicals.

11 Error messages and troubleshooting

LCD display	Effect	Cause	Elimination
E1	The ORANGE LED flashes 1 x	The sensor has detected an internal error.	▶ Replace the sensor.
E2	The ORANGE LED flashes 2 x	The power supply is too low or too high.	▶ Check the power supply (in the LCD diagnosis menu). ▶ Check the wiring.
E4	The ORANGE LED flashes 4 x	The sensor is receiving too little AIR energy.	▶ Reduce the AIR angle. ▶ Increase the AIR immunity filter (values > 2.8 m). ▶ Disable 1 curtain.
E5	The ORANGE LED flashes 5 x	The sensor is receiving too much AIR energy. External elements are interfering with the sensor.	▶ Slightly increase the AIR angle. ▶ Check for interfering elements and eliminate if necessary (e.g. lamps or earthing of the drive housing). ▶ Reduce the AIR immunity filter to 1, 2 or 3.
E6	**GC 363 SF only:** The ORANGE LED flashes 6 x	The radar output is defective.	▶ Replace the sensor.
E7	**GC 363 SF only:** The ORANGE LED flashes 7 x	Interference of the internal radar test.	▶ Change the radar angle. ▶ Change the radar antenna. ▶ Replace the sensor if the ORANGE LED continues to flash.
E8	The ORANGE LED flashes 8 x	The AIR energy transmitter is defective.	▶ Replace the sensor.
E9	The ORANGE LED flashes 9 x	The internal radar reference is incorrect.	▶ Replace the sensor.

LCD display	Effect	Cause	Elimination
–	The ORANGE LED is on	The sensor has a memory problem.	▶ Switch the power supply off and on. ▶ Replace the sensor if the ORANGE LED lights up again.
–	The RED LED flashes quickly after teaching with door movement	The sensor senses the door during teaching with door movement.	▶ Remove AIR curtains from the door. ▶ Install the sensor as close as possible to the door. Use installation accessories if necessary. ▶ Start teaching with door movement. Move out of the scanning area for this.
–	The RED LED lights up sporadically	The sensor is vibrating.	▶ Check whether the sensor has been fixed in place correctly. ▶ Check the position of cable and cover.
		The sensor senses the door.	▶ Start teaching with door movement and change the AIR angle.
		Elements in the environment are interfering with the sensor.	▶ Increase AIR immunity filter to 3. ▶ Select default setting 2 and 3.
–	The GREEN LED lights up sporadically	Rain or falling leaves are interfering with the sensor.	▶ Select default setting 2 and 3. ▶ Increase the radar immunity filter.
		Phantom opening through door movement.	▶ Change radar angle.
		The sensor is vibrating.	▶ Check whether the sensor and door profile have been fixed in place correctly. ▶ Check the position of cable and cover.
		The sensor senses the door or other moving objects.	▶ Remove objects if possible. ▶ Change radar field size or angle.

LCD display	Effect	Cause	Elimination
–	The LED and the LCD display are off		▶ Check the wiring.
–	The responses of the door and the LED do not correlate		▶ Check initial configuration. ▶ Check the wiring.
–	The LCD display or remote control are not responding.	The sensor is protected by a password.	▶ Enter the access code. Forgotten the access code? ▶ Switch the power supply on and off during the 1st minute after switch-on to unlock the sensor.

12 Technical data

Power supply:	12 V to 24 V, AC ±10 %; 12 V to 30 V, DC ±10 %	
Power consumption:	< 2.5 W	
Installation height:	2 m to 3.5 m	
Temperature range:	–25 °C to +55 °C, 0 to 95 % relative humidity, non-condensing	
Protection rating:	IP54 according to EN 60529	
Applicable directives:	R&TTE 1999/5/EC, MD 2006/42/EC, RoHS 2 2011/65/EU, LVD 2006/95/EC	
Scanning mode:	**Movement**  Min. scanning speed: 5 cm/s	**Presence**  Typical response time: < 200 ms (max. 500 ms)
Technology:	Microwave Doppler radar Transmission frequency: 24.150 GHz Transmission power: < 20 dBm EIRP Density of transmission power: < 5 mW/cm^2	Active infrared control with background evaluation Spot: 5 cm x 5 cm (typ.) Number of light beams: max. 24 per curtain Number of curtains: 2
Output (GC 363 R):	Semiconductor relay (potential-free, polarity-free) Max. switching current: 100 mA Max. switching voltage: 42 V, AC/DC	Semiconductor relay (standard) (potential-free, polarity-free) Max. switching current: 100 mA Max. switching voltage: 42 V, AC/DC Holding time: 0.3 to 1 s
Output (GC 363 SF):	Semiconductor relay (potential-free, polarity-free) Max. switching current: 100 mA Max. switching voltage: 42 V, AC/DC	Semiconductor relay (standard) (potential-free, polarity-free) Max. switching current: 100 mA Max. switching voltage: 42 V, AC/DC Holding time: 0.3 to 1 s
	Frequency output: Pulsating signal (f = 100 Hz ± 10 %)	
	Current source output: dc insulated current source active Freeswing voltage: 6.5 V Output voltage at 10 mA: 3 V min. Typical load: up to 3 opto-couplers in series Movement detection: Current source inactive Idling voltage: < 500 mV	

	Movement	**Presence**
Test input		Signal voltage: Low: < 1 V, High: > 10 V (max. 30 V) Response time to test query: < 5 ms (typ.)
Interference influences	< 70 dB	
Conformity to standard (GC 363 R)		EN 12978 EN ISO 13849-1: 2008 PL «c» CAT.2 (providing the door drive tests the sensor at least once per door cycle) IEC 61496-1:2012 ESPE Type 2 EN 16005: 2012 Chapter 4.6.8 DIN 18650-1: 2010 Chapter 5.7.4 BS 7036-1: 1996 Chapter 8.1
Conformity to standard (GC 363 SF)	EN 12978 EN ISO 13849-1: 2008 PL «d» CAT.2 EN 16005: 2012 Chapter 4.6.8 DIN 18650-1: 2010 Chapter 5.7.4; AutSchR BS 7036-1: 1996 Chapter 7.3.2 (only applicable for frequency and current source output)	EN 12978 EN ISO 13849-1: 2008 PL «c» CAT.2 (providing the door drive tests the sensor at least once per door cycle) IEC 61496-1:2012 ESPE Type 2 EN 16005: 2012 Chapter 4.6.8 DIN 18650-1: 2010 Chapter 5.7.4 BS 7036-1: 1996 Chapter 8.1
Type-tested by the German Association for Technical Inspection(TÜV)	CE EC certificate of conformity number 44 205 13089602	

Only for EU countries: In compliance with the European Directive 2012/19/EU concerning waste electrical and electronic equipment (WEEE)

13 Accessories / Spare parts

		Material no.
Ceiling bracket	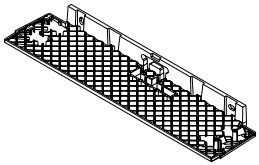	151256
Ceiling installation kit	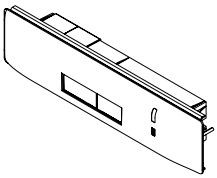	151253 (black) 151254 (white)
Weather canopy	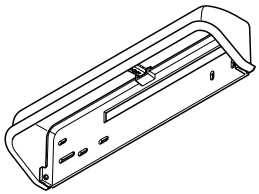	158250
GC 363 S interface	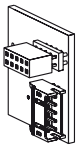	151361 (for GC 363 SF only)
Curved adaptor	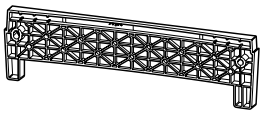	151255
Remote control		100061
Infrared detector		112321

Germany
GEZE Sonderkonstruktionen GmbH
Planken 1
97944 Boxberg-Schweigern
Tel. +49 (0) 7930 9294 0
Fax +49 (0) 7930 9294 10
E-Mail: sk.de@geze.com

GEZE GmbH
Niederlassung Süd-West
Tel. +49 (0) 7152 203 594
E-Mail: leonberg.de@geze.com

GEZE GmbH
Niederlassung Süd-Ost
Tel. +49 (0) 7152 203 6440
E-Mail: muenchen.de@geze.com

GEZE GmbH
Niederlassung Ost
Tel. +49 (0) 7152 203 6840
E-Mail: berlin.de@geze.com

GEZE GmbH
Niederlassung Mitte/Luxemburg
Tel. +49 (0) 7152 203 6888
E-Mail: frankfurt.de@geze.com

GEZE GmbH
Niederlassung West
Tel. +49 (0) 7152 203 6770
E-Mail: duesseldorf.de@geze.com

GEZE GmbH
Niederlassung Nord
Tel. +49 (0) 7152 203 6600
E-Mail: hamburg.de@geze.com

GEZE Service GmbH
Tel. +49 (0) 1802 923392
E-Mail: service-info.de@geze.com

Austria
GEZE Austria
E-Mail: austria.at@geze.com
www.geze.at

Baltic States
GEZE GmbH Baltic States office
E-Mail: office-latvia@geze.com
www.geze.com

Benelux
GEZE Benelux B.V.
E-Mail: benelux.nl@geze.com
www.geze.be
www.geze.nl

Bulgaria
GEZE Bulgaria - Trade
E-Mail: office-bulgaria@geze.com
www.geze.bg

China
GEZE Industries (Tianjin) Co., Ltd.
E-Mail: chinasales@geze.com.cn
www.geze.com.cn

GEZE Industries (Tianjin) Co., Ltd.
Branch Office Shanghai
E-Mail: chinasales@geze.com.cn
www.geze.com.cn

GEZE Industries (Tianjin) Co., Ltd.
Branch Office Guangzhou
E-Mail: chinasales@geze.com.cn
www.geze.com.cn

GEZE Industries (Tianjin) Co., Ltd.
Branch Office Beijing
E-Mail: chinasales@geze.com.cn
www.geze.com.cn

France
GEZE France S.A.R.L.
E-Mail: france.fr@geze.com
www.geze.fr

Hungary
GEZE Hungary Kft.
E-Mail: office-hungary@geze.com
www.geze.hu

Iberia
GEZE Iberia S.R.L.
E-Mail: info@geze.es
www.geze.es

India
GEZE India Private Ltd.
E-Mail: office-india@geze.com
www.geze.in

Italy
GEZE Italia S.r.l
E-Mail: italia.it@geze.com
www.geze.it

GEZE Engineering Roma S.r.l
E-Mail: roma@geze.biz
www.geze.it

Poland
GEZE Polska Sp.z o.o.
E-Mail: geze.pl@geze.com
www.geze.pl

Romania
GEZE Romania S.R.L.
E-Mail: office-romania@geze.com
www.geze.ro

Russia
OOO GEZE RUS
E-Mail: office-russia@geze.com
www.geze.ru

Scandinavia – Sweden
GEZE Scandinavia AB
E-Mail: sverige.se@geze.com
www.geze.se

Scandinavia – Norway
GEZE Scandinavia AB avd. Norge
E-Mail: norge.se@geze.com
www.geze.no

Scandinavia – Denmark
GEZE Danmark
E-Mail: danmark.se@geze.com
www.geze.dk

Singapore
GEZE (Asia Pacific) Pte, Ltd.
E-Mail: gezesea@geze.com.sg
www.geze.com

South Africa
GEZE Distributors (Pty) Ltd.
E-Mail: info@gezesa.co.za
www.geze.co.za

Switzerland
GEZE Schweiz AG
E-Mail: schweiz.ch@geze.com
www.geze.ch

Turkey
GEZE Kapı ve Pencere Sistemleri
E-Mail: office-turkey@geze.com
www.geze.com

Ukraine
LLC GEZE Ukraine
E-Mail: office-ukraine@geze.com
www.geze.ua

United Arab Emirates/GCC
GEZE Middle East
E-Mail: gezeme@geze.com
www.geze.ae

United Kingdom
GEZE UK Ltd.
E-Mail: info.uk@geze.com
www.geze.com

Der Maßstab DIN ISO 9001 unseres Handelns

GEZE GmbH
Reinhold-Vöster-Straße 21–29
71229 Leonberg
Germany

Tel.: 0049 7152 203 0
Fax: 0049 7152 203 310
www.geze.com

GEZE