# TWIN QUASAR and TWIN VEGA

**Chain actuator with encoder**

**Twin Quasar : Force 600 N - Maximum stroke 500 mm**

**Twin Vega : Force : 600 N - Maximum stroke 300 mm**

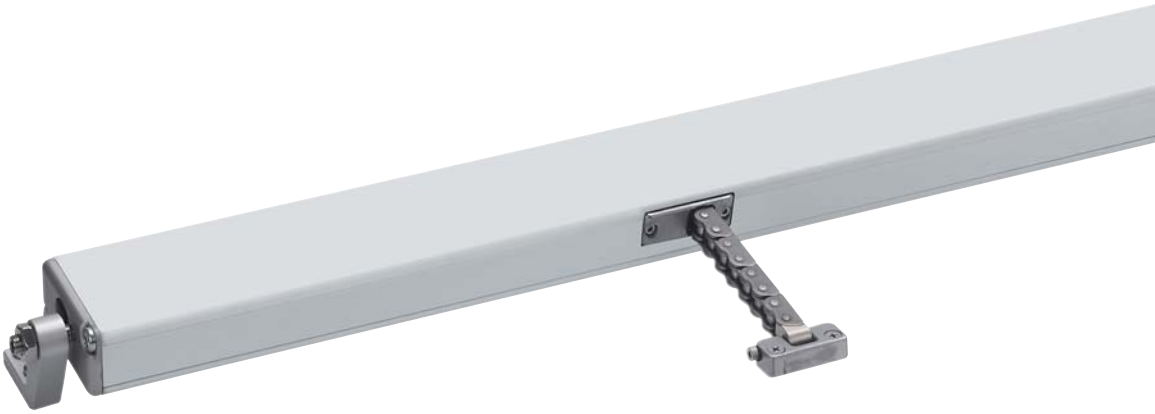

- Stainless steel double link chains
- The control electronic circuit synchronizes the speed of the motors through encoder.
- Anodized (silver) or painted (white or black) aluminium casing.
- The manual closing position regulation is not required: the stop in closing position is regulated by an electronic limit switch.
- Being provided with two chains, both TWIN QUASAR and TWIN VEGA are particularly suitable for very wide windows (minimum 1550 mm width). For a better aesthetic result, on request, it is possible to supply actuators with customized distance between the chains (minimum 720 mm for TWIN QUASAR and 480 mm for TWIN VEGA) in order to install an actuator as long as the window.
- Supplied with 1,5 m cable and pivoting brackets
- The installation without brackets is possible only if the height of the vent is at least 1500 mm for TWIN QUASAR and 900 mm for TWIN VEGA
- In case of vents with four-bar hinges, please contact our Technical Dpt. for choosing the suitable fixing bracket.
- If installed on PVC windows, the profile has to be reinforced.
- **TWIN QUASAR DC F-SIGNAL** and **TWIN VEGA DC F-SIGNAL** are special versions with opening and closing feedback signal (free potential, maintained contact), activated by the current limit.

| | TWIN QUASAR AC | TWIN QUASAR DC | TWIN QUASAR DC F-SIGNAL | TWIN VEGA DC | TWIN VEGA DC F-SIGNAL |
|---|---|---|---|---|---|
| VOLTAGE SUPPLY | 100 Vac - 240 Vac | 24 Vdc ±10% | 24 Vdc ±10% | 24 Vdc ±10% | 24 Vdc ±10% |
| ELECTRIC CONNECTION | 3 wires + earth | 2 wires | 2+3 wires | 2 wires | 2+3 wires |
| OPERATION | | by polarity inversion | by polarity inversion | by polarity inversion | by polarity inversion |
| STROKE | 500 mm | 500 mm | 500 mm | 300 mm | 300 mm |
| FORCE (push and pull action) | 600 N | 600 N | 600 N | 600 N | 600 N |
| SPEED | ~ 15 mm/s | ~ 15 mm/s | ~ 15 mm/s | ~ 9 mm/s | ~ 9 mm/s |
| CURRENT ABSORPTION (with max load) | 0,8 A - 0,4 A | 1,8 A | 1,8 A | 1,4 A | 1,4 A |
| PARALLEL CONNECTION | YES | YES | YES | YES | YES |
| LIMIT STOP | Electronic | Electronic | Electronic | Electronic | Electronic |
| SAFETY STOP | Electronic | Electronic | Electronic | Electronic | Electronic |
| PROTECTION CLASS | IP 30 | IP 30 | IP 30 | IP 30 | IP 30 |
| **Part No.** | | | | | |
| SILVER ANODIZED | 40989D | 40992G | 41310C | 41245P | 41313F |
| BLACK RAL 9005 | 40990E | 40993H | 41311D | 41246Q | 41314G |
| WHITE RAL 9010 | 40991F | 40994I | 41312E | 41247R | 41315H |

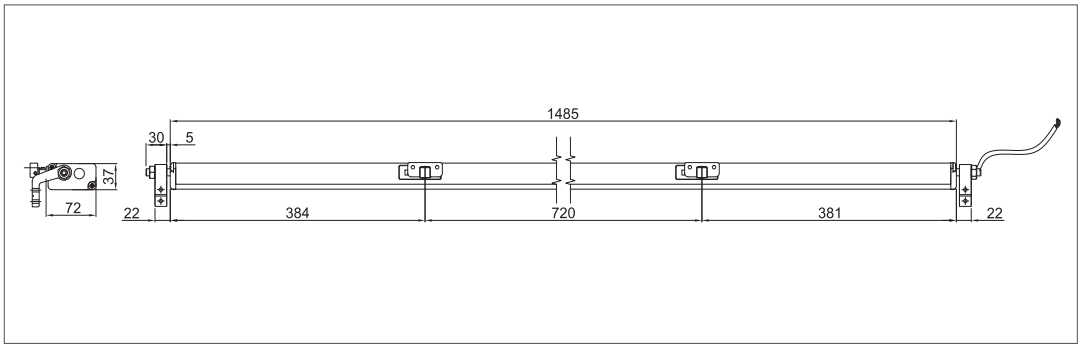


Twin Quasar dimensions

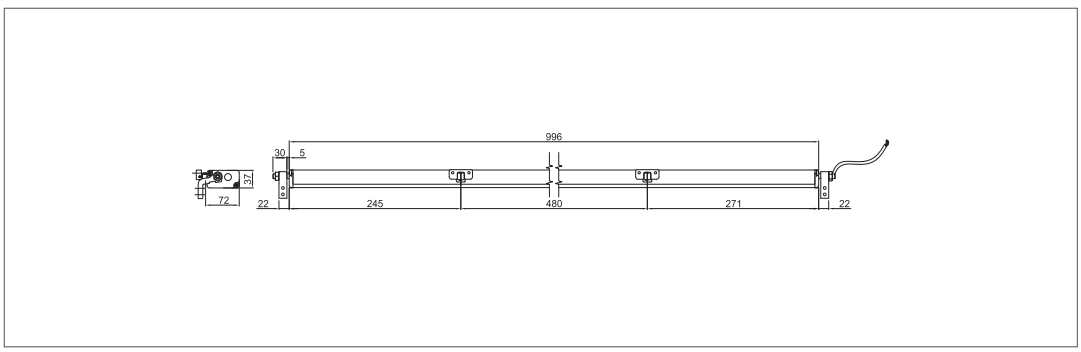


Twin Vega dimensions

## Accessories

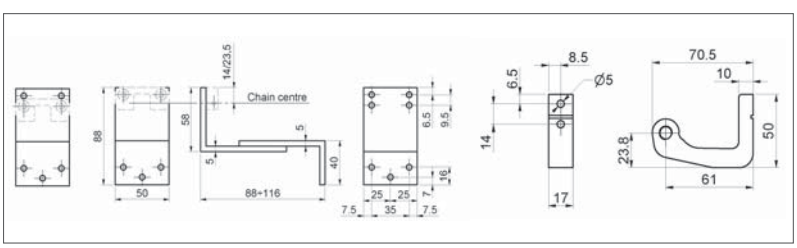


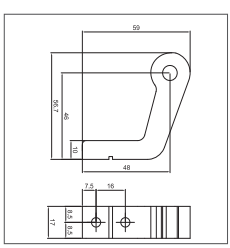


Pivoting brackets kit (2 pcs included)

Brackets kit for bottom hinged windows:
GREY anodized aluminium part No 41101H
BLACK painted RAL 9005 part No 41102I
WHITE painted RAL 9010 part No 41103J

## Installation examples

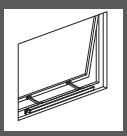

Top hinged window

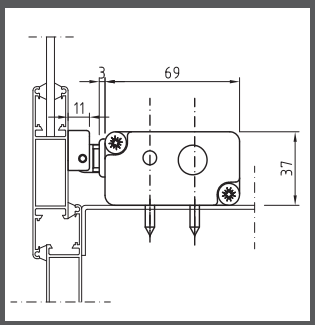


On windowsill without brackets

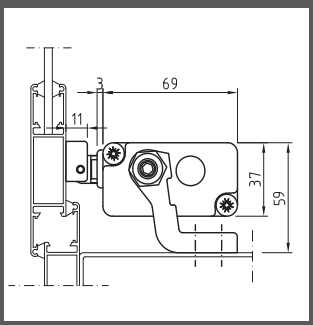


On the frame with pivoting brackets included

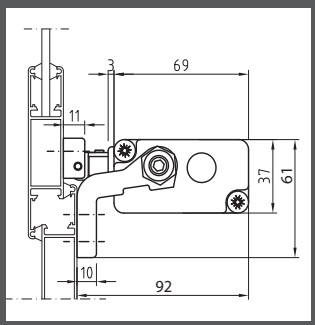


On windowsill with pivoting brackets included

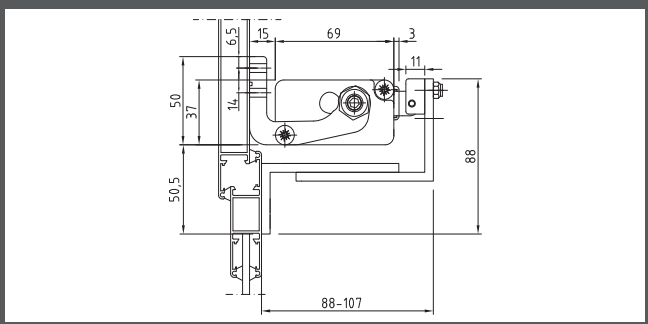


On the frame with brakets for bottom hinged windows

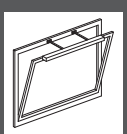

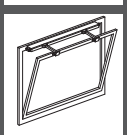

Bottom hinged windows

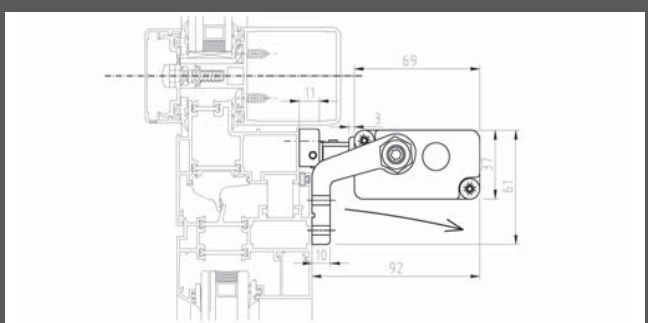


On the vent with pivoting brakets included

**SPECIFICATION PROSPECT**

Electric chain actuator Ultraflex Control System named Twin Quasar with two stainless steel double link chains and electronic circuit for the two internal motors control. Force 600 N. Stroke 500 mm. Voltage supply 100-240 vac or 24 Vdc. Electronic limit stop and electronic stop in the intermediate positions in case of overload. Pivoting brackets included. Parallel connection. Aluminium casing anodized or painted. Conform to 2006/95/CE and 2004/108/CE directives (the 24 Vdc version is conform to 2004/108/CE directive).

Electric chain actuator Ultraflex Control System named Twin Vega with two stainless steel double link chains and electronic circuit for the two internal motors control. Force 600 N. Stroke 300 mm. Voltage supply 24 Vdc. Electronic limit stop and electronic stop in the intermediate positions in case of overload. Pivoting brackets included. Parallel connection. Aluminium casing anodized or painted. Conform to to 2004/108/CE directive.